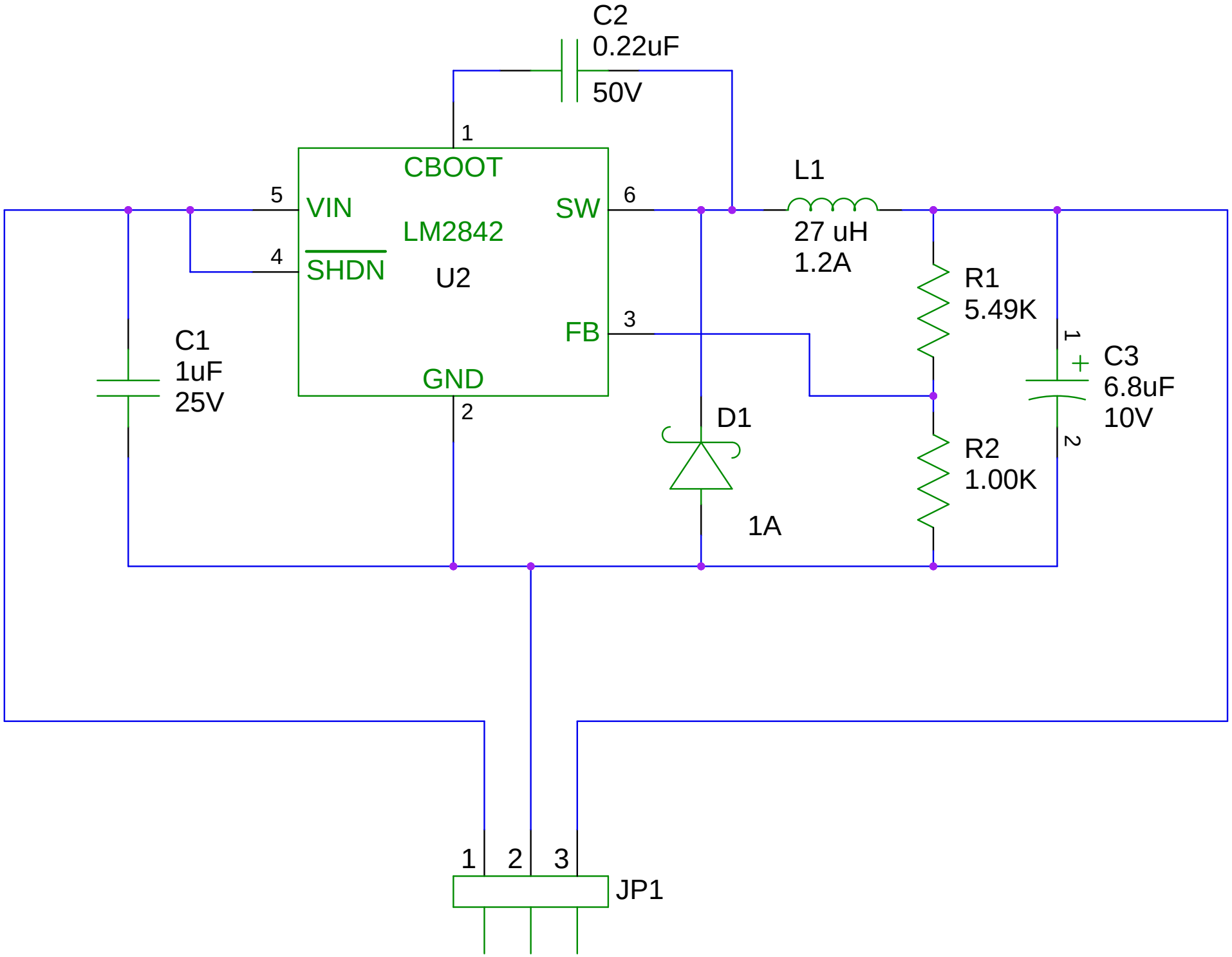
C2
0.22uF
50V
1
CBOOT
5
VIN
SW
6
LM2842
4
SHDN
U2
FB
3
GND
2
L1
27 uH
1.2A
R1
5.49K
C1
1uF
25V
1
C3
6.8uF
10V
2
D1
R2
1.00K
1A
1
2
3
JP1